CHINA·HWAMDA

THE CRAFTSMANSHIP OF THE WORLD

中国的华美达，世界的工匠心

SPECIAL INJECTION

MOLDING MACHINE FOR LARGE LOGISTICS PRODUCTS

大型物流专用注塑机



宁波华美达机械制造有限公司

NINGBO HWAMDA MACHINERY MANUFACTURING CO.,LTD.

地址：浙江省宁波市小港经济技术开发区东海路新唐家弄336号

Add：Xintangjianong No.336,Donghai Rd, Xiaogang development zone, Ningbo, Zhejiang Province, China

邮编（P.C.）：315803

Http://www.hwamda.com

国内销售

电话: 0574-86175111

0574-86176676

传真: 0574-86176890

邮箱: info@hwamda.com

International

Tel: 86-574-86176630

86-574-86228735

Fax: 86-574-86228918

E-mail: sales@hwamda.com

宁波华美达机械制造有限公司

NINGBO HWAMDA MACHINERY MANUFACTURING CO.,LTD.



宁波华美达机械制造有限公司地处“中国塑机之都”的浙江省宁波市，是一家专业化生产塑胶注塑成型机械的高新技术企业，经过不断的技术创新，公司开发制造的产品已广泛应用于汽车、电子、医疗、包装等众多注塑制品行业，目前，华美达已经成长为具有规模和雄厚竞争实力的注塑机械研发制造企业。

华美达公司拥有4个生产基地，超过10万平方米厂房设施，各种大型先进精密加工设备，团结了一支高素质的企业管理与技术创新团队。公司一直致力于高效节能型注塑机的开发生产与市场推广，已成功推出的有伺服节能注塑机、二板注塑机、全电动注塑机、高速精密注塑机、双色注塑机等多个系列各种通用及专用型产品。

为贴近客户，公司大力开拓国际市场，在国内外建立60余处完善的销售机构及海外服务中心，华美达注塑机受到了中东、南美、东南亚、东欧等各个国家和地区客户的使用和欢迎，建立了面向国际市场的营销体系。

华美达公司通过了ISO9001、ISO14001、OHSAS18001管理体系认证以及CE产品认证，所生产的各系列注塑机均配备世界知名品牌的液压、电器及控制系统，引进国际领先设计理念，通过严格的检验、装配、调试，为客户提供最优质的产品与服务。

一流的品质，是华美达执着追求的重要目标。尽力满足顾客需求，以精益求精、开拓进取的企业精神缔造辉煌的未来，公司始终坚持“专心专注，做好塑机”的企业理念，为中国注塑机械产业的发展和提高做出自己的贡献。

关于华美达
About us



Ningbo Hwamda Machinery Manufacturing Co., Ltd. is a new and high technology enterprise devoted to manufacture plastic injection machine, lying in the "City of China plastic molding machine" - Ningbo, Zhejiang.

Now, Hwamda Company owns four factories with more than one hundred thousand square meters. There are over 300 workers and staff members, holding together a high-quality team of managers and technical team. Our company always devoted to R&D for high efficiency and energy-saving injection molding machine. At present, our main products including servo motor energy saving machines, two platen machines, full electric machines, high speed machine for thin-wall products, twin-color machines and other standard or special injection molding machines.

Following the idea of serving customers, we have established more than 60 perfect sales & service branch in China and abroad. Hwamda machine has sold to many countries such as Russia, Poland, Mexico, India, Sri Lanka, Egypt, Brazil, Peru, Colombia, etc. Hwamda has gradually set up a marketing system covering both the domestic and overseas markets.

Hwamda has passed the ISO9001, ISO14001, OHSAS18001 and CE certification. All the series of injection machine are equipped with world famous hydraulic & electric elements and control system. Through strict inspection, assembly and test, Hwamda has provided first-class products and services to customers.

"First-class quality" is what we are pursuing the most. We will try our best to meet the requirements of customers and create even better future. Our company firmly sticks to the idea of "With undivided attention to manufacture excellent plastic injection molding machines", and makes our own contribution for the development and improvement of national plastic industry.






大型物流专用注塑机

SPECIAL INJECTION MOLDING MACHINE FOR LARGE LOGISTICS PRODUCTS









✱ 适用于：塑料托盘、周转箱、垃圾桶、化粪池等
Pallet, Turnover Box, Trash Bin, Septic Tank Etc.

01 高精度、高响应
High Precision & High Response

采用全数字闭环控制，精度高，压力可精确到0.3bar，流量稳定，尤其在低流量时优势更加明显。
采用永磁同步伺服电机和专用伺服驱动器，响应速度快，节能高效。
电控系统采用高阶塑机专用控制器，大规格彩色显示屏，关键部件选用施耐德、ABB、OMRON等进口元件，质量可靠。

Adopt fully digital closed-loop control, the pressure can be accurate to 0.3 bar, with high precision and stable flow, especially under low flow rate.
Sync servo motor enables efficiency response and energy saving.High-performance controller, large color LCD display, to ensure reliable quality, the key electric parts select import brand, like Schneider, ABB, OMRON etc.



02 电预塑系统
E-Motor Charge System

标配电动储料系统，电预塑螺杆最大连续转速高达70转以上，相对于一般储料马达储料方式更快，同时使用电预塑系统可节省耗电30%以上。
根据生产情况可使用开顶联动功能，缩短生产周期；易于实现开储同步功能，使成型周期更短。

Standard with e-motor charge system, the maximum continuous rotation speed of screw is over 70rpm, faster and 30% energy saving.
Parallel movement of eject on fly function can be used according to the production situation to shorten the production cycle. Easy to realize the parallel movement of charging on fly function, shorter cycle time.

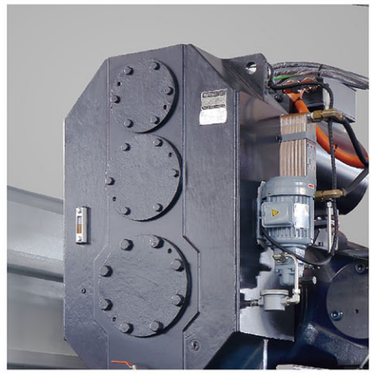

03 超大开模行程
Super Large Opening Stroke

相比常规机型，大型物流专用机具有超大的开模行程优势，更适合深腔模具生产。

Compared with standard models, the machine opening stroke is larger , especially suit to deep cavity molds such as trash bin.

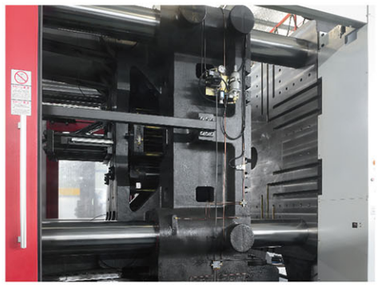

04 特殊混色设计方案
Special Color Mixing Project Design

特殊混色方案提升塑化及混色效果，亦适用于回料，制品光洁度好。

Improve plasticization and color mixing capacity, also suitable for recycling material.



技术参数表 *SPECIFICATIONS*

说明	DESCRIPTION	UNIT	HMD2280M8–S				HMD2400M8–S				HMD2900M8–S			
国际公认型号	International size rating	——	40000/2280		58000/2280		40000/2400		58000/2400		58000/2900		72000/2900	
射胶系统	INJECTION UNIT		A	B	A	B	A	B	A	B	A	B	A	B
理论注射容积	Shot volume	cm^3	25434	28339	37680	41542	25434	28339	37680	41542	37680	41542	47493	51908
实际注射量（PS）	Shot weight (PS)	g（克）	23145	25788	34289	37803	23145	25788	34289	37803	34289	37803	43218	47236
		oz（盎司）	816.4	909.6	1209.5	1333.5	816.4	909.6	1209.5	1333.5	1209.5	1333.5	1524.5	1666.2
射出速率（PS）	Injection rate	cm^3/s	1875	2089	2165	2387	1875	2089	2165	2387	2165	2387	2908	3178
螺杆直径	Screw diameter	mm	180	190	200	210	180	190	200	210	200	210	220	230
射胶压力	Injection pressure	MPa	156	140	154	139	156	140	154	139	154	139	152	139
螺杆长度直径比	Screw L:D ratio	——	24:1	22.7:1	21.5:1	20.5:1	24:1	22.7:1	21.5:1	20.5:1	21.5:1	20.5:1	21.5:1	20.5:1
螺杆行程	Screw stroke	mm	1000		1200		1000		1200		1200		1250	
螺杆转速	Screw speed(stepless)	r/ min	0-80		0-63		0-80		0-63		0-63		0-55	
锁模系统	CLAMPING UNIT													
锁模力	Clamping force	kN	22800				24000				29000			
开模行程	Opening stroke	mm	1900				1980				2050			
模板尺寸	Platen size	mm×mm	2505×2380				2615×2480				2620×2520			
连接柱内距	Space between tie bars	mm×mm	1770×1600				1850×1650				2050×1750			
模板最大距离	Max.daylight	mm	3600				3780				3950			
容模量 (最薄—最厚)	Mold thickness(Min-Max)	mm	800-1700				800-1800				900-1900			
油压顶出行程	Hydraulic ejection stroke	mm	420				480				480			
油压顶出力	Hydraulic ejection force	kN	420				565				565			
动力/电热	POWER UNIT													
油压系统压力	Hydraulic system pressure	MPa	17.5				17.5				17.5			
油泵马达	Pump motor	kW	240		264		240		260		260		280	
电储料马达	E-Motor charge	kW	264		310		264		310		310		350	
电热量	Heating capacity	kW	170		200		170		200		200		279	
温度控制区数	Number of temp control zones	——	11		13		11		13		13		13	
其它	GENERAL													
油箱容量	Oil tank capacity	L（升）	3400				3400				4300			
机械外形尺寸 (L× W ×H)	Machine dimensions (L× W ×H)	m×m×m	19.0×3.9×4.3				20.0×4.0×4.5				20.8×4.5×5.0			
机 重	Machine weight	kg	148000		154000		175000		180000		200000		205000	

模板尺寸
PLATEN DIMENSION

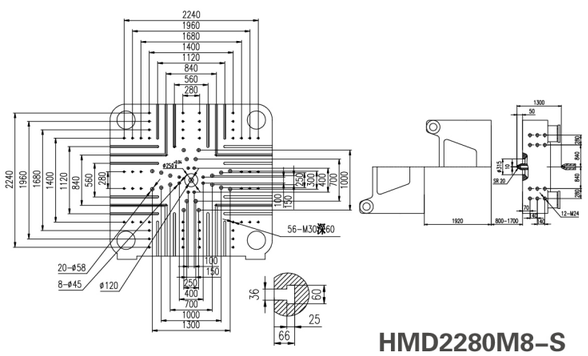

HMD2280M8–S

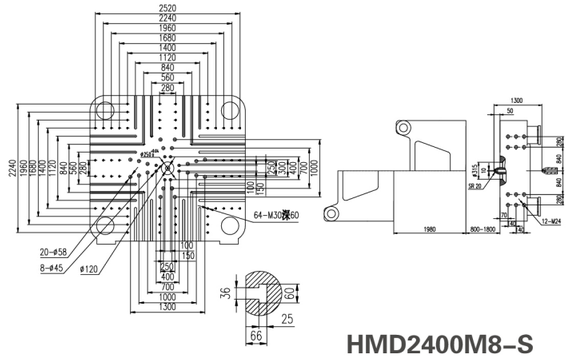

HMD2400M8–S

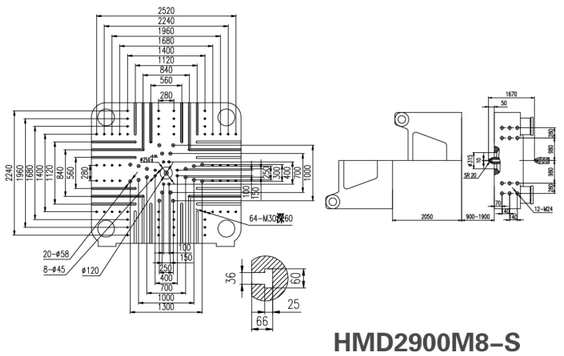

HMD2900M8–S

说明：由于产品改进，技术参数的变更，恕不另行通知。

Remark:We reserve the right to make any technical improvement without prior notice.